DOSI PROJECT

Váteres inteligentes

Okos WC-k

Catálogo de modelos con fotografías, planos, medidas y opciones de equipamiento.

Las fichas originales se conservan en el idioma del proveedor para mantener la información técnica.

Documentación técnica del proveedor. Las medidas, prestaciones, configuración, instalación, garantía y asistencia se confirman para el modelo y proyecto concretos.

Beszállítói műszaki dokumentáció. A méreteket, a felszereltséget, a telepítést, a jótállást és a támogatás feltételeit projektenként egyeztetjük.

dosiproject.com
dosiprojectweb@gmail.com
WhatsApp +34 620 867 616

INSPECTION QUALITY





Comprehensive testing of the overall lifespan of the machine:

Install the smart toilet in its operational state and conduct cyclic tests on functions such as hip cleaning, feminine cleaning, and warm air. For electric control, functions such as seat rings and automatic opening and closing of cover plates are also subjected to cyclic testing.

Perform 25000 cycles:

Simulate the use of various functions during the simulation process, and after a long cycle, check whether there are cracks, fissures, damages, fractures, functional abnormalities, and other phenomena in the various components of the smart toilet.



Ceramic appearance inspection:

Appearance inspection mainly checks the surface flatness of the productUniformity of color, presence of defects, etc

Ceramic performance testing:

Performance testing includes compressive strength, water absorption, and chemical resistanceTests on corrosiveness and other aspects. For products such as toilets,We will also conduct tests on the flushing function and sewage discharge capacity.
Only products that have passed all testing items can be labeledAttach qualified labels, enter the market, and provide consumers with the opportunity toRelying on the user experience.



ADVANCED EQUIPMENT INDUSTRY LEADING

The laboratory is designed and customized by Guangzhou Meitong Laboratory for our company, and the laboratory standards can be applied to both national and American standards.
From small-scale trial production testing of new products to failure improvement solutions, as well as performance stability in harsh environments, stability of machine functions and performance, and reliability testing of functional components, we strive to achieve excellence in every product.

[Silent flushing system]

BIKI flushing method
Silent flushing system

Adopting innovative single hole silent flushing design and built-in water tank,
Maintain stable water flow, concealed upward flushing design,
Significantly reduce flushing time and decibels, maintaining strong momentum at all times.

BIKI flushing method

25%

The decibel level of flushing has decreased by about



Single hole siphon flushing water
All in one clean and tidy

Single hole water outlet siphon ceramic structure,
Refactoring the siphon pipeline to achieve a quiet and efficient sewage discharge experience,
Say goodbye to traditional intelligent dual flushing and silent operation without reducing power.

Siphon design ensures strong sewage discharge effect;
360 ° clean without dead corners, achieving both quietness and efficiency.



Single hole siphon flushing water

The K series is designed with ceramic single hole siphon flushing, which is fast and silent, achieving one-time flushing Clean up. Cancel the design of the upper and lower punch heads and remove the traditional punching port.



Conventional up and down flushing

The E series adopts a conventional upward and downward punch design.

K20

Hidden water tank wall mounted intelligent toilet

Scan the code to watch















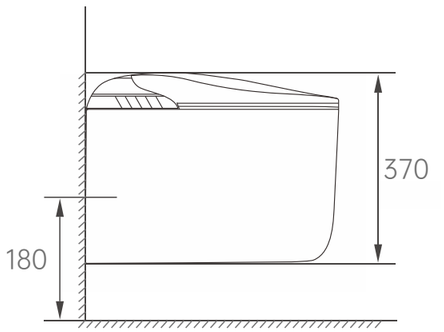

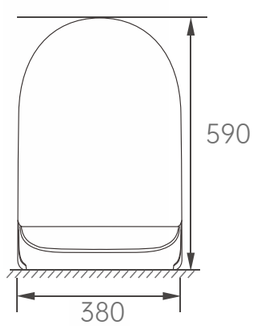

PRODUCT INFORMATION

Size: 590x380x370mm Pit distance: 180mm

Heating: instant heating Flushing: jet siphon type Drainage: wall drainage

Simplified version No water pressure requirement

No washing/No drying/No display screen/No remote control

Manual flip cover | Laser-guided foot-activated flush | Year-round temperature control | Smart Size Adjustment

Standard version No water pressure requirement

Bidet | Warm air drying | High-definition display screen | Remote control operation | Manual flip cover | Laser-guided foot-activated flush | Year-round temperature control | Smart Size Adjustment

High configuration version No water pressure requirement

Auto-flip cover | Laser-etched flip cover/ring | Bidet | Warm air drying | High-definition display screen | Remote control operation | Laser-guided foot-activated flush | Year-round temperature control | Smart Size Adjustment

basic function

Super vortex flushing	Reciprocating cleaning	Strong and weak massage	Children's cleaning	Off seat flushing	Pipe position adjustment	Leakage protection	Warm air drying	Prevent low-temperature burns
Intelligent size punch	Power outage flushing	Water pressure regulation	Seat induction	Water temperature regulation	Remote control flushing	Wind and temperature regulation	Digital display	Seat heating
Four season warmth sensation	Hip cleaning	Female cleaning	Side button	Self cleaning nozzle	Slowly lowering the cover plate	Sedentary reminder	ABS antibacterial spray bar	Intelligent remote control

K30

Hidden water tank wall mounted intelligent toilet

Scan the code to watch















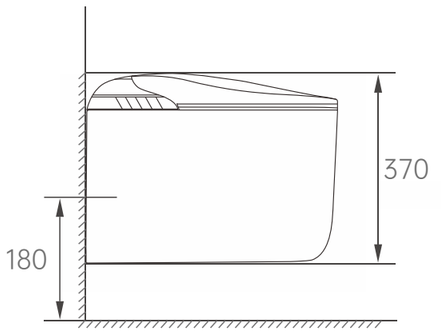

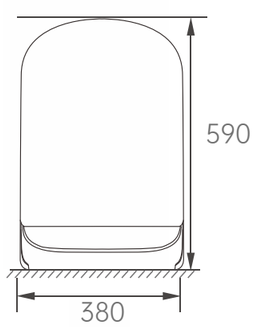

PRODUCT INFORMATION

Size: 590x380x370mm Pit distance: 180mm

Heating: instant heating Flushing: jet siphon type Drainage: wall drainage

Simplified version
No water pressure requirement

No washing/No drying/No display screen/No remote control

Manual flip cover | Laser-guided foot-activated flush | Year-round temperature control | Smart Size Adjustment

Standard version
No water pressure requirement

Bidet | Warm air drying | High-definition display screen | Remote control operation | Manual flip cover | Laser-guided foot-activated flush | Year-round temperature control | Smart Size Adjustment

High configuration version
No water pressure requirement

Auto-flip cover | Laser-etched flip cover/ring | Bidet | Warm air drying | High-definition display screen | Remote control operation | Laser-guided foot-activated flush | Year-round temperature control | Smart Size Adjustment

basic function

Super vortex flushing	Reciprocating cleaning	Strong and weak massage	Children's cleaning	Off seat flushing	Pipe position adjustment	Leakage protection	Warm air drying	Prevent low-temperature burns
Intelligent size punch	Power outage flushing	Water pressure regulation	Seat induction	Water temperature regulation	Remote control flushing	Wind and temperature regulation	Digital display	Seat heating
Four season warmth sensation	Hip cleaning	Female cleaning	Side button	Self cleaning nozzle	Slowly lowering the cover plate	Sedentary reminder	ABS antibacterial spray bar	Intelligent remote control

K21

Hidden water tank wall mounted intelligent toilet

Scan the code to watch















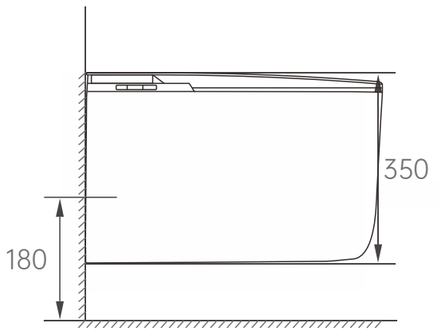

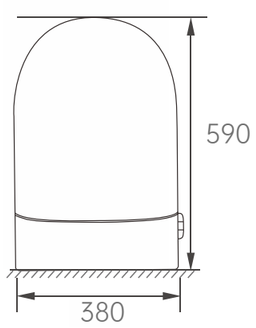

PRODUCT INFORMATION

Size: 590x380x350mm Pit distance: 180mm

Heating: instant heating Flushing: jet siphon type Drainage: wall drainage

Simplified version
No water pressure requirement

No washing/No drying/No display screen/No remote control

Manual flip cover | Laser-guided foot-activated flush | Year-round temperature control | Smart Size Adjustment

Standard version
No water pressure requirement

Bidet | Warm air drying | High-definition display screen | Remote control operation | Manual flip cover | Laser-guided foot-activated flush | Year-round temperature control | Smart Size Adjustment

High configuration version
No water pressure requirement

Auto-flip cover | Laser-etched flip cover/ring | Bidet | Warm air drying | High-definition display screen | Remote control operation | Laser-guided foot-activated flush | Year-round temperature control | Smart Size Adjustment

basic function

Super vortex flushing	Reciprocating cleaning	Strong and weak massage	Children's cleaning	Off seat flushing	Pipe position adjustment	Leakage protection	Warm air drying	Prevent low-temperature burns
Intelligent size punch	Power outage flushing	Water pressure regulation	Seat induction	Water temperature regulation	Remote control flushing	Wind and temperature regulation	Digital display	Seat heating
Four season warmth sensation	Hip cleaning	Female cleaning	Side button	Self cleaning nozzle	Slowly lowering the cover plate	Sedentary reminder	ABS antibacterial spray bar	Intelligent remote control

K31

Hidden water tank wall mounted intelligent toilet

Scan the code to watch















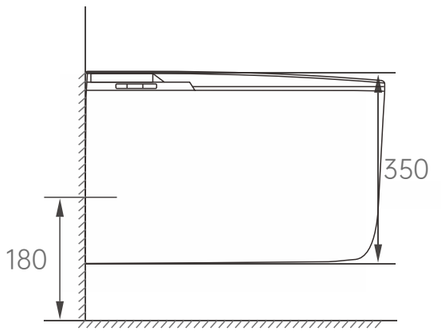

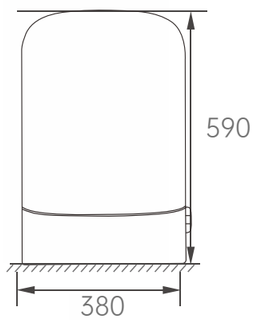

PRODUCT INFORMATION

Size: 590x380x350mm Pit distance: 180mm

Heating: instant heating Flushing: jet siphon type Drainage: wall drainage

Simplified version No water pressure requirement

No washing/No drying/No display screen/No remote control

Manual flip cover | Laser-guided foot-activated flush | Year-round temperature control | Smart Size Adjustment

Standard version No water pressure requirement

Bidet | Warm air drying | High-definition display screen | Remote control operation | Manual flip cover | Laser-guided foot-activated flush | Year-round temperature control | Smart Size Adjustment

High configuration version No water pressure requirement

Auto-flip cover | Laser-etched flip cover/ring | Bidet | Warm air drying | High-definition display screen | Remote control operation | Laser-guided foot-activated flush | Year-round temperature control | Smart Size Adjustment

basic function

Super vortex flushing	Reciprocating cleaning	Strong and weak massage	Children's cleaning	Off seat flushing	Pipe position adjustment	Leakage protection	Warm air drying	Prevent low-temperature burns
Intelligent size punch	Power outage flushing	Water pressure regulation	Seat induction	Water temperature regulation	Remote control flushing	Wind and temperature regulation	Digital display	Seat heating
Four season warmth sensation	Hip cleaning	Female cleaning	Side button	Self cleaning nozzle	Slowly lowering the cover plate	Sedentary reminder	ABS antibacterial spray bar	Intelligent remote control

K50

Wall-mounted smart toilet with built-in tank

Scan the code to watch















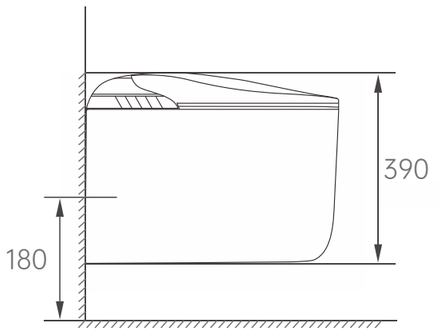

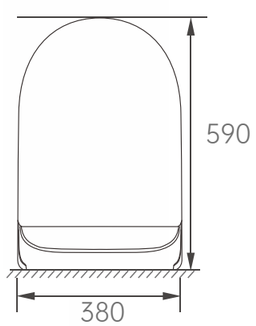

PRODUCT INFORMATION

Size: 590x380x390mm Pit distance: 180mm

Heating: instant heating Flushing: jet siphon type Drainage: wall drainage

Simplified version No water pressure requirement

No washing/No drying/No display screen/No remote control

Manual flip cover | Laser-guided foot-activated flush | Year-round temperature control | Smart Size Adjustment

Standard version No water pressure requirement

Bidet | Warm air drying | High-definition display screen | Remote control operation | Manual flip cover | Laser-guided foot-activated flush | Year-round temperature control | Smart Size Adjustment

High configuration version No water pressure requirement

Auto-flip cover | Laser-etched flip cover/ring | Bidet | Warm air drying | High-definition display screen | Remote control operation | Laser-guided foot-activated flush | Year-round temperature control | Smart Size Adjustment

basic function

Super vortex flushing	Reciprocating cleaning	Strong and weak massage	Children's cleaning	Off seat flushing	Pipe position adjustment	Leakage protection	Warm air drying	Prevent low-temperature burns
Intelligent size punch	Power outage flushing	Water pressure regulation	Seat induction	Water temperature regulation	Remote control flushing	Wind and temperature regulation	Digital display	Seat heating
Four season warmth sensation	Hip cleaning	Female cleaning	Side button	Self cleaning nozzle	Slowly lowering the cover plate	Sedentary reminder	ABS antibacterial spray bar	Intelligent remote control

K60

Wall-mounted smart toilet with built-in tank

Scan the code to watch



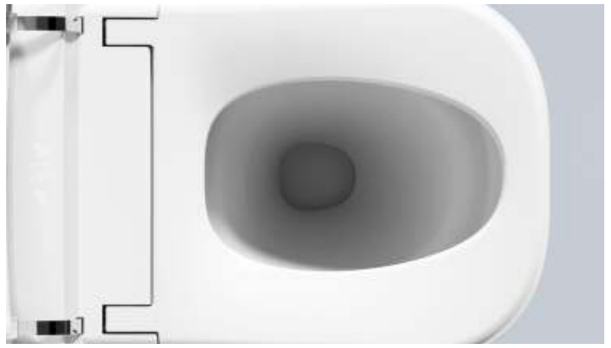











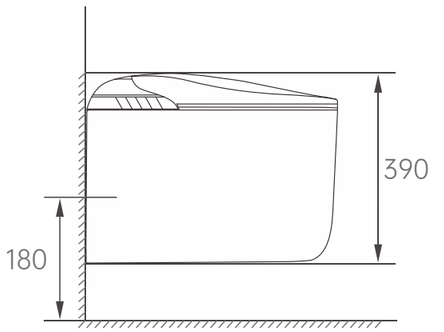

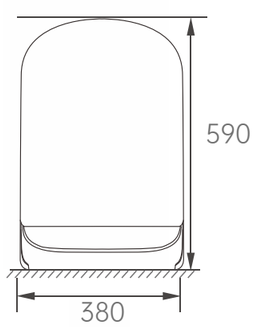

PRODUCT INFORMATION

Size: 590x380x390mm Pit distance: 180mm

Heating: instant heating Flushing: jet siphon type Drainage: wall drainage

Simplified version
No water pressure requirement

No washing/No drying/No display screen/No remote control

Manual flip cover | Laser-guided foot-activated flush | Year-round temperature control | Smart Size Adjustment

Standard version
No water pressure requirement

Bidet | Warm air drying | High-definition display screen | Remote control operation | Manual flip cover | Laser-guided foot-activated flush | Year-round temperature control | Smart Size Adjustment

High configuration version
No water pressure requirement

Auto-flip cover | Laser-etched flip cover/ring | Bidet | Warm air drying | High-definition display screen | Remote control operation | Laser-guided foot-activated flush | Year-round temperature control | Smart Size Adjustment

basic function

Super vortex flushing	Reciprocating cleaning	Strong and weak massage	Children's cleaning	Off seat flushing	Pipe position adjustment	Leakage protection	Warm air drying	Prevent low-temperature burns
Intelligent size punch	Power outage flushing	Water pressure regulation	Seat induction	Water temperature regulation	Remote control flushing	Wind and temperature regulation	Digital display	Seat heating
Four season warmth sensation	Hip cleaning	Female cleaning	Side button	Self cleaning nozzle	Slowly lowering the cover plate	Sedentary reminder	ABS antibacterial spray bar	Intelligent remote control

K51

Wall-mounted smart toilet with built-in tank

Scan the code to watch















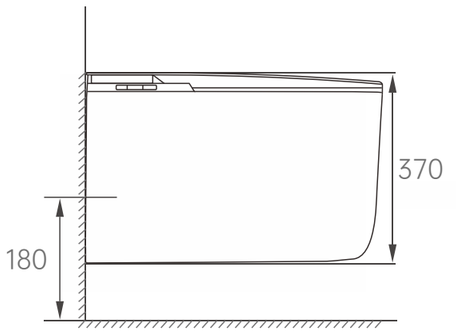

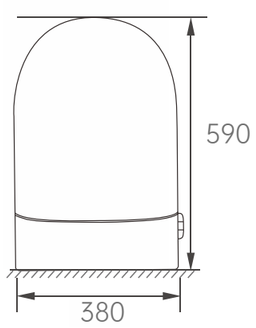

PRODUCT INFORMATION

Size: 590x380x370mm Pit distance: 180mm

Heating: instant heating Flushing: jet siphon type Drainage: wall drainage

Simplified version
No water pressure requirement

No washing/No drying/No display screen/No remote control

Manual flip cover | Laser-guided foot-activated flush | Year-round temperature control | Smart Size Adjustment

Standard version
No water pressure requirement

Bidet | Warm air drying | High-definition display screen | Remote control operation | Manual flip cover | Laser-guided foot-activated flush | Year-round temperature control | Smart Size Adjustment

High configuration version
No water pressure requirement

Auto-flip cover | Laser-etched flip cover/ring | Bidet | Warm air drying | High-definition display screen | Remote control operation | Laser-guided foot-activated flush | Year-round temperature control | Smart Size Adjustment

basic function

Super vortex flushing	Reciprocating cleaning	Strong and weak massage	Children's cleaning	Off seat flushing	Pipe position adjustment	Leakage protection	Warm air drying	Prevent low-temperature burns
Intelligent size punch	Power outage flushing	Water pressure regulation	Seat induction	Water temperature regulation	Remote control flushing	Wind and temperature regulation	Digital display	Seat heating
Four season warmth sensation	Hip cleaning	Female cleaning	Side button	Self cleaning nozzle	Slowly lowering the cover plate	Sedentary reminder	ABS antibacterial spray bar	Intelligent remote control

K61

Wall-mounted smart toilet with built-in tank

Scan the code to watch















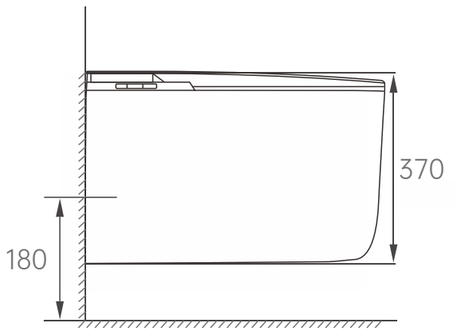

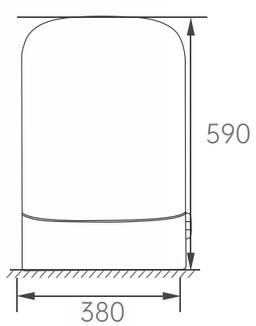

PRODUCT INFORMATION

Size: 590x380x370mm Pit distance: 180mm

Heating: instant heating Flushing: jet siphon type Drainage: wall drainage

Simplified version
No water pressure requirement

No washing/No drying/No display screen/No remote control

Manual flip cover | Laser-guided foot-activated flush | Year-round temperature control | Smart Size Adjustment

Standard version
No water pressure requirement

Bidet | Warm air drying | High-definition display screen | Remote control operation | Manual flip cover | Laser-guided foot-activated flush | Year-round temperature control | Smart Size Adjustment

High configuration version
No water pressure requirement

Auto-flip cover | Laser-etched flip cover/ring | Bidet | Warm air drying | High-definition display screen | Remote control operation | Laser-guided foot-activated flush | Year-round temperature control | Smart Size Adjustment

basic function

Super vortex flushing	Reciprocating cleaning	Strong and weak massage	Children's cleaning	Off seat flushing	Pipe position adjustment	Leakage protection	Warm air drying	Prevent low-temperature burns
Intelligent size punch	Power outage flushing	Water pressure regulation	Seat induction	Water temperature regulation	Remote control flushing	Wind and temperature regulation	Digital display	Seat heating
Four season warmth sensation	Hip cleaning	Female cleaning	Side button	Self cleaning nozzle	Slowly lowering the cover plate	Sedentary reminder	ABS antibacterial spray bar	Intelligent remote control

K40

Floor-mounted smart toilet

Scan the code to watch









Jet Black



Premium Gray



Platinum Dust Silver



Wood grain

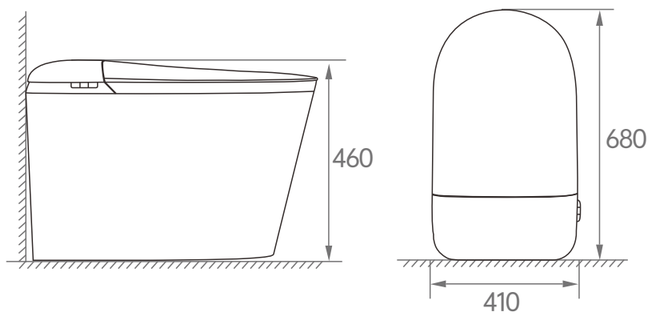

PRODUCT INFORMATION

Size: 680x410x460mm Pit distance: 300/400mm

Heating: instant heating Flushing: jet siphon type Drainage: floor drainage

Simplified version
No water pressure requirement

No washing/No drying/No display screen/No remote control

Manual flip cover | Capacitor foot-operated flush | Sedentary Reminder | Year-round temperature control | Smart Size Adjustment

Simplified Automatic Version
No water pressure requirement

No washing/No drying/No display screen

Doorbell Remote Control | Auto-flip cover | Foam Shield Deodorizer | Capacitor foot-operated flush | Sedentary Reminder | Year-round temperature control | Smart Size Adjustment

Standard version
No water pressure requirement

Remote control operation | Manual flip cover | Foam Shield Deodorizer | Bidet | Warm air drying | High-definition display screen | Capacitor foot-operated flush

Sedentary Reminder | Year-round temperature control | Smart Size Adjustment

High configuration version
No water pressure requirement

Remote control operation | Auto-flip cover | Capacitive foot feel flip cover/circle | Foam Shield Deodorizer | Bidet | Warm air drying | High-definition display screen

Smart Size Adjustment | Capacitor foot-operated flush | Year-round temperature control

Top-of-the-line version
No water pressure requirement

Voice Control | Remote control operation | Auto-flip cover | Capacitive foot feel flip cover/circle | Foam Shield Deodorizer | Bidet | Warm air drying

High-definition display screen | Smart Size Adjustment | Capacitor foot-operated flush | Year-round temperature control

basic function

Super vortex flushing	Reciprocating cleaning	Strong and weak massage	Children's cleaning	Off seat flushing	Pipe position adjustment	Leakage protection	Warm air drying	Prevent low-temperature burns
Intelligent size punch	Power outage flushing	Water pressure regulation	Seat induction	Water temperature regulation	Remote control flushing	Wind and temperature regulation	Digital display	Seat heating
Four season warmth sensation	Hip cleaning	Female cleaning	Side button	Self cleaning nozzle	Slowly lowering the cover plate	Sedentary reminder	ABS antibacterial spray bar	Intelligent remote control

K45

Floor-mounted smart toilet

Scan the code to watch









Jet Black



Premium Gray



Platinum Dust Silver



Wood grain

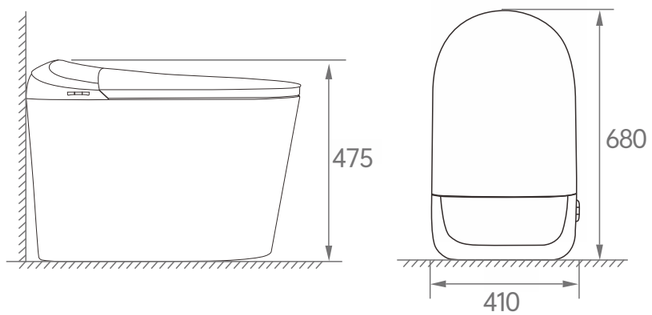

PRODUCT INFORMATION

Size: 680x410x475mm Pit distance: 300/400mm

Heating: instant heating Flushing: jet siphon type Drainage: floor drainage

Simplified version
No water pressure requirement

No washing/No drying/No display screen/No remote control

Manual flip cover | Capacitor foot-operated flush | Sedentary Reminder | Year-round temperature control | Smart Size Adjustment

Simplified Automatic Version
No water pressure requirement

No washing/No drying/No display screen

Doorbell Remote Control | Auto-flip cover | Foam Shield Deodorizer | Capacitor foot-operated flush | Sedentary Reminder | Year-round temperature control | Smart Size Adjustment

Standard version
No water pressure requirement

Remote control operation | Manual flip cover | Foam Shield Deodorizer | Bidet | Warm air drying | High-definition display screen | Capacitor foot-operated flush

Sedentary Reminder | Year-round temperature control | Smart Size Adjustment

High configuration version
No water pressure requirement

Remote control operation | Auto-flip cover | Capacitive foot feel flip cover/circle | Foam Shield Deodorizer | Bidet | Warm air drying | High-definition display screen

Smart Size Adjustment | Capacitor foot-operated flush | Year-round temperature control

Top-of-the-line version
No water pressure requirement

Voice Control | Remote control operation | Auto-flip cover | Capacitive foot feel flip cover/circle | Foam Shield Deodorizer | Bidet | Warm air drying

High-definition display screen | Smart Size Adjustment | Capacitor foot-operated flush | Year-round temperature control

basic function

Super vortex flushing	Reciprocating cleaning	Strong and weak massage	Children's cleaning	Off seat flushing	Pipe position adjustment	Leakage protection	Warm air drying	Prevent low-temperature burns
Intelligent size punch	Power outage flushing	Water pressure regulation	Seat induction	Water temperature regulation	Remote control flushing	Wind and temperature regulation	Digital display	Seat heating
Four season warmth sensation	Hip cleaning	Female cleaning	Side button	Self cleaning nozzle	Slowly lowering the cover plate	Sedentary reminder	ABS antibacterial spray bar	Intelligent remote control

Bamboo series EZ



EZ70

Floor-mounted smart toilet

Scan the code to watch















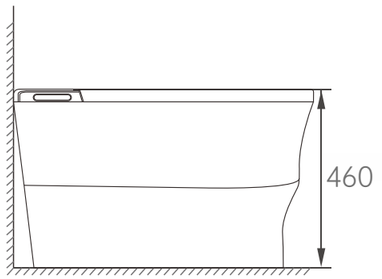

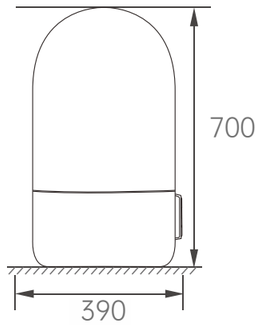

PRODUCT INFORMATION

Size: 700x390x460mm Pit distance: 300/400mm

Heating: instant heating Flushing: jet siphon type Drainage: floor drainage

Top-of-the-line version

No water pressure requirement

Voice Control	Remote control operation	Auto-flip cover	Kick and feel flip cover/circle	Foam Shield Deodorizer	Bidet	Warm air drying		
High-definition display screen	Smart Size Adjustment	foot-operated flushing	Year-round temperature control					

basic function

Super vortex flushing	Reciprocating cleaning	Strong and weak massage	Children's cleaning	Off seat flushing	Pipe position adjustment	Leakage protection	Warm air drying	Prevent low-temperature burns
Intelligent size punch	Power outage flushing	Water pressure regulation	Seat induction	Water temperature regulation	Remote control flushing	Wind and temperature regulation	Digital display	Seat heating
Four season warmth sensation	Hip cleaning	Female cleaning	Side button	Self cleaning nozzle	Slowly lowering the cover plate	Sedentary reminder	ABS antibacterial spray bar	Intelligent remote control

EZ72

Floor-mounted smart toilet

Scan the code to watch















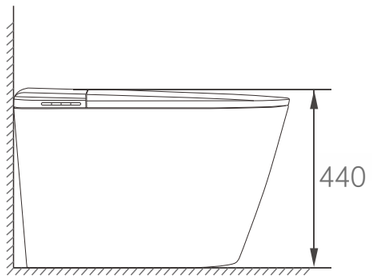

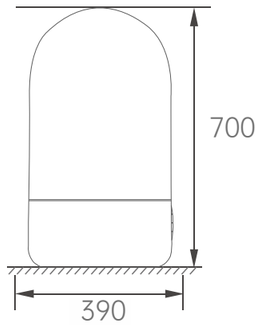

PRODUCT INFORMATION

Size: 700x390x440mm Pit distance: 300/400mm

Heating: instant heating Flushing: jet siphon type Drainage: floor drainage

Simplified version Water tank model

No washing/No drying/No display screen/No remote control

Manual flip cover | foot-operated flushing | Sedentary Reminder | Year-round temperature control | Smart Size Adjustment

Simplified version Pulse version

No washing/No drying/No display screen/No remote control

Manual flip cover | foot-operated flushing | Sedentary Reminder | Year-round temperature control | Smart Size Adjustment

basic function

Super vortex flushing	Reciprocating cleaning	Strong and weak massage	Children's cleaning	Off seat flushing	Pipe position adjustment	Leakage protection	Warm air drying	Prevent low-temperature burns
Intelligent size punch	Power outage flushing	Water pressure regulation	Seat induction	Water temperature regulation	Remote control flushing	Wind and temperature regulation	Digital display	Seat heating
Four season warmth sensation	Hip cleaning	Female cleaning	Side button	Self cleaning nozzle	Slowly lowering the cover plate	Sedentary reminder	ABS antibacterial spray bar	Intelligent remote control

EZ75

Floor-mounted smart toilet











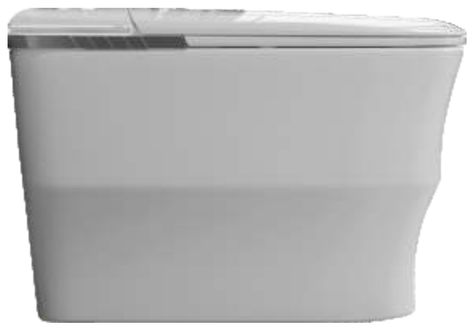



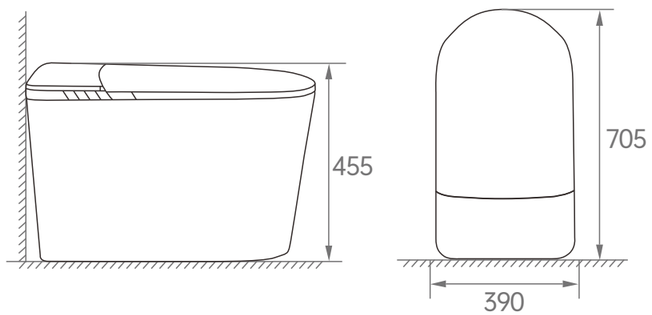

PRODUCT INFORMATION

Size: 705x390x455mm Pit distance: 300/400mm

Heating: instant heating Flushing: jet siphon type Drainage: floor drainage

Simplified version
No water pressure requirement

No washing/No drying/No display screen/No remote control

Manual flip cover | Capacitor foot-operated flush | Sedentary Reminder | Year-round temperature control | Smart Size Adjustment

Simplified Automatic Version
No water pressure requirement

No washing/No drying/No display screen

Doorbell Remote Control | Auto-flip cover | Foam Shield Deodorizer | Capacitor foot-operated flush | Sedentary Reminder | Year-round temperature control | Smart Size Adjustment

Standard version
No water pressure requirement

Remote control operation | Manual flip cover | Foam Shield Deodorizer | Bidet | Warm air drying | High-definition display screen | Capacitor foot-operated flush

Sedentary Reminder | Year-round temperature control | Smart Size Adjustment

High configuration version
No water pressure requirement

Remote control operation | Auto-flip cover | Capacitive foot feel flip cover/circle | Foam Shield Deodorizer | Bidet | Warm air drying | High-definition display screen

Smart Size Adjustment | Capacitor foot-operated flush | Year-round temperature control

Top-of-the-line version
No water pressure requirement

Voice Control | Remote control operation | Auto-flip cover | Capacitive foot feel flip cover/circle | Foam Shield Deodorizer | Bidet | Warm air drying

High-definition display screen | Smart Size Adjustment | Capacitor foot-operated flush | Year-round temperature control

basic function

Super vortex flushing	Reciprocating cleaning	Strong and weak massage	Children's cleaning	Off seat flushing	Pipe position adjustment	Leakage protection	Warm air drying	Prevent low-temperature burns
Intelligent size punch	Power outage flushing	Water pressure regulation	Seat induction	Water temperature regulation	Remote control flushing	Wind and temperature regulation	Digital display	Seat heating
Four season warmth sensation	Hip cleaning	Female cleaning	Side button	Self cleaning nozzle	Slowly lowering the cover plate	Sedentary reminder	ABS antibacterial spray bar	Intelligent remote control

Conventional flushing series E

Salute to minimalist aesthetics
Refactoring spatial dimensions

Taking inspiration from minimalist aesthetics, redefine the possibilities of small spaces.
The slender body and smooth lines interpret the aesthetic of a tube shape rather than a simple one
Concept, let limited space shine with infinite possibilities.



Innovative and flexible bracket fully utilizes space

Taking inspiration from minimalist aesthetics, redefine the possibilities of small spaces. The slim body and smooth lines interpret the tube shape And not just simple aesthetic concepts, let limited space radiate infinite possibilities.



Pre embedded steel frame bearing capacity, with a bearing capacity of up to 400KG

No need to embed a water tank inside the wall, effectively avoiding the risk of large-scale water leakage caused by water tank rupture, and making maintenance more convenient.

E20

Hidden water tank wall mounted intelligent toilet

Scan the code to watch















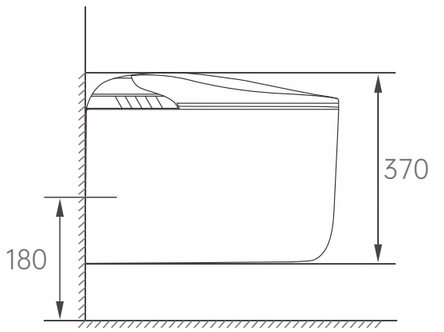

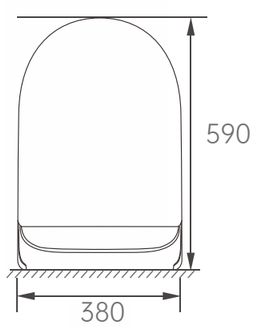

PRODUCT INFORMATION

Size: 590x380x370mm Pit distance: 180mm

Heating: instant heating Flushing: jet siphon type Drainage: wall drainage

Simplified version
No water pressure requirement

No washing/No drying/No display screen/No remote control

Manual flip cover | Laser-guided foot-activated flush | Year-round temperature control | Smart Size Adjustment

Standard version
No water pressure requirement

Bidet | Warm air drying | High-definition display screen | Remote control operation | Manual flip cover | Laser-guided foot-activated flush | Year-round temperature control | Smart Size Adjustment

High configuration version
No water pressure requirement

Auto-flip cover | Laser-etched flip cover/ring | Bidet | Warm air drying | High-definition display screen | Remote control operation | Laser-guided foot-activated flush | Year-round temperature control | Smart Size Adjustment

basic function

Super vortex flushing	Reciprocating cleaning	Strong and weak massage	Children's cleaning	Off seat flushing	Pipe position adjustment	Leakage protection	Warm air drying	Prevent low-temperature burns
Intelligent size punch	Power outage flushing	Water pressure regulation	Seat induction	Water temperature regulation	Remote control flushing	Wind and temperature regulation	Digital display	Seat heating
Four season warmth sensation	Hip cleaning	Female cleaning	Side button	Self cleaning nozzle	Slowly lowering the cover plate	Sedentary reminder	ABS antibacterial spray bar	Intelligent remote control

E30

Hidden water tank wall mounted intelligent toilet

Scan the code to watch















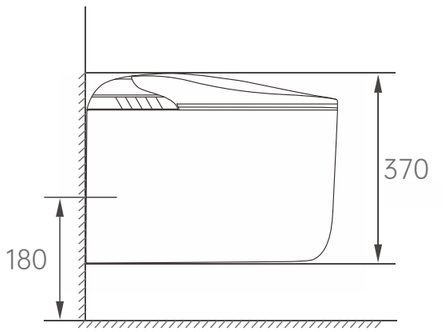

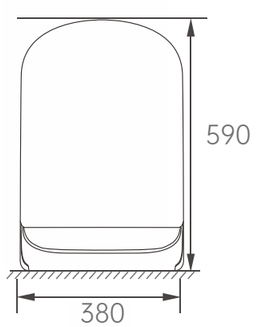

PRODUCT INFORMATION

Size: 590x380x370mm Pit distance: 180mm

Heating: instant heating Flushing: jet siphon type Drainage: wall drainage

Simplified version No water pressure requirement

No washing/No drying/No display screen/No remote control

Manual flip cover | Laser-guided foot-activated flush | Year-round temperature control | Smart Size Adjustment

Standard version No water pressure requirement

Bidet | Warm air drying | High-definition display screen | Remote control operation | Manual flip cover | Laser-guided foot-activated flush | Year-round temperature control | Smart Size Adjustment

High configuration version No water pressure requirement

Auto-flip cover | Laser-etched flip cover/ring | Bidet | Warm air drying | High-definition display screen | Remote control operation | Laser-guided foot-activated flush | Year-round temperature control | Smart Size Adjustment

basic function

Super vortex flushing	Reciprocating cleaning	Strong and weak massage	Children's cleaning	Off seat flushing	Pipe position adjustment	Leakage protection	Warm air drying	Prevent low-temperature burns
Intelligent size punch	Power outage flushing	Water pressure regulation	Seat induction	Water temperature regulation	Remote control flushing	Wind and temperature regulation	Digital display	Seat heating
Four season warmth sensation	Hip cleaning	Female cleaning	Side button	Self cleaning nozzle	Slowly lowering the cover plate	Sedentary reminder	ABS antibacterial spray bar	Intelligent remote control

E21

Hidden water tank wall mounted intelligent toilet

Scan the code to watch















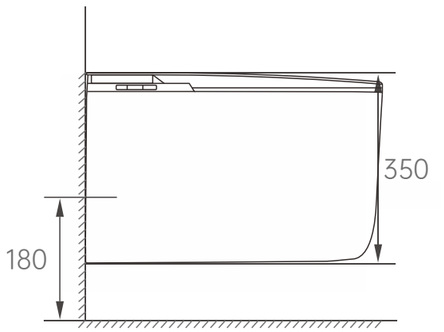

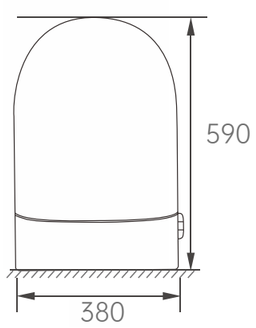

PRODUCT INFORMATION

Size: 590x380x350mm Pit distance: 180mm

Heating: instant heating Flushing: jet siphon type Drainage: wall drainage

Simplified version
No water pressure requirement

No washing/No drying/No display screen/No remote control

Manual flip cover | Laser-guided foot-activated flush | Year-round temperature control | Smart Size Adjustment

Standard version
No water pressure requirement

Bidet | Warm air drying | High-definition display screen | Remote control operation | Manual flip cover | Laser-guided foot-activated flush | Year-round temperature control | Smart Size Adjustment

High configuration version
No water pressure requirement

Auto-flip cover | Laser-etched flip cover/ring | Bidet | Warm air drying | High-definition display screen | Remote control operation | Laser-guided foot-activated flush | Year-round temperature control | Smart Size Adjustment

basic function

Super vortex flushing	Reciprocating cleaning	Strong and weak massage	Children's cleaning	Off seat flushing	Pipe position adjustment	Leakage protection	Warm air drying	Prevent low-temperature burns
Intelligent size punch	Power outage flushing	Water pressure regulation	Seat induction	Water temperature regulation	Remote control flushing	Wind and temperature regulation	Digital display	Seat heating
Four season warmth sensation	Hip cleaning	Female cleaning	Side button	Self cleaning nozzle	Slowly lowering the cover plate	Sedentary reminder	ABS antibacterial spray bar	Intelligent remote control

E31

Hidden water tank wall mounted intelligent toilet

Scan the code to watch















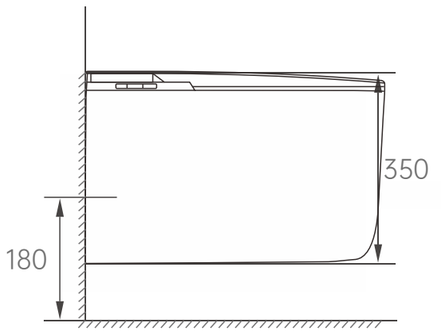

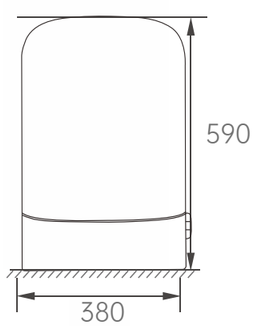

PRODUCT INFORMATION

Size: 590x380x350mm Pit distance: 180mm

Heating: instant heating Flushing: jet siphon type Drainage: wall drainage

Simplified version
No water pressure requirement

No washing/No drying/No display screen/No remote control

Manual flip cover | Laser-guided foot-activated flush | Year-round temperature control | Smart Size Adjustment

Standard version
No water pressure requirement

Bidet | Warm air drying | High-definition display screen | Remote control operation | Manual flip cover | Laser-guided foot-activated flush | Year-round temperature control | Smart Size Adjustment

High configuration version
No water pressure requirement

Auto-flip cover | Laser-etched flip cover/ring | Bidet | Warm air drying | High-definition display screen | Remote control operation | Laser-guided foot-activated flush | Year-round temperature control | Smart Size Adjustment

basic function

Super vortex flushing	Reciprocating cleaning	Strong and weak massage	Children's cleaning	Off seat flushing	Pipe position adjustment	Leakage protection	Warm air drying	Prevent low-temperature burns
Intelligent size punch	Power outage flushing	Water pressure regulation	Seat induction	Water temperature regulation	Remote control flushing	Wind and temperature regulation	Digital display	Seat heating
Four season warmth sensation	Hip cleaning	Female cleaning	Side button	Self cleaning nozzle	Slowly lowering the cover plate	Sedentary reminder	ABS antibacterial spray bar	Intelligent remote control

Small units have a big impact
Refactoring spatial dimensions

Taking inspiration from minimalist aesthetics, redefine the possibilities of small spaces.
The slender body and smooth lines interpret the aesthetic of a tube shape rather than a simple one
Concept, let limited space shine with infinite possibilities.





59cm small size, does not take up space

Small and exquisite, enjoy it. The 59cm small-sized smart toilet reduces the proportion of toilet space, bidding farewell to crowding
It's easy to improve one's sense of happiness in life without compromising on space



Widen the seat ring width by 90mm with a large U

The U-shaped seat ring design is enlarged to perfectly fit the buttocks, providing a comfortable sitting experience without numbness in the legs during prolonged sitting.

E80

Floor-mounted smart toilet

Scan the code to watch















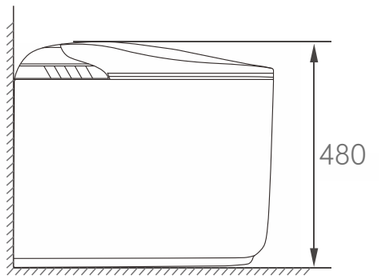

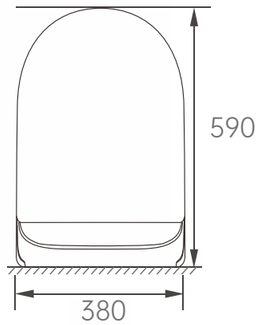

PRODUCT INFORMATION

Size: 590x380x480mm Pit distance: 300/400mm

Heating: instant heating Flushing: jet siphon type Drainage: floor drainage

Simplified version No water pressure requirement

No washing/No drying/No display screen/No remote control

Manual flip cover | Capacitor foot-operated flush | Sedentary Reminder | Year-round temperature control | Smart Size Adjustment

Simplified Automatic Version No water pressure requirement

No washing/No drying/No display screen

Doorbell Remote Control | Auto-flip cover | Foam Shield Deodorizer | Capacitor foot-operated flush | Sedentary Reminder | Year-round temperature control | Smart Size Adjustment

Standard version No water pressure requirement

Remote control operation | Manual flip cover | Foam Shield Deodorizer | Bidet | Warm air drying | High-definition display screen | Capacitor foot-operated flush

Sedentary Reminder | Year-round temperature control | Smart Size Adjustment

High configuration version No water pressure requirement

Remote control operation | Auto-flip cover | Capacitive foot feel flip cover/circle | Foam Shield Deodorizer | Bidet | Warm air drying | High-definition display screen

Smart Size Adjustment | Capacitor foot-operated flush | Year-round temperature control

Top-of-the-line version No water pressure requirement

Voice Control | Remote control operation | Auto-flip cover | Capacitive foot feel flip cover/circle | Foam Shield Deodorizer | Bidet | Warm air drying

High-definition display screen | Smart Size Adjustment | Capacitor foot-operated flush | Year-round temperature control

basic function

Super vortex flushing	Reciprocating cleaning	Strong and weak massage	Children's cleaning	Off seat flushing	Pipe position adjustment	Leakage protection	Warm air drying	Prevent low-temperature burns
Intelligent size punch	Power outage flushing	Water pressure regulation	Seat induction	Water temperature regulation	Remote control flushing	Wind and temperature regulation	Digital display	Seat heating
Four season warmth sensation	Hip cleaning	Female cleaning	Side button	Self cleaning nozzle	Slowly lowering the cover plate	Sedentary reminder	ABS antibacterial spray bar	Intelligent remote control

E90

Floor-mounted smart toilet

Scan the code to watch















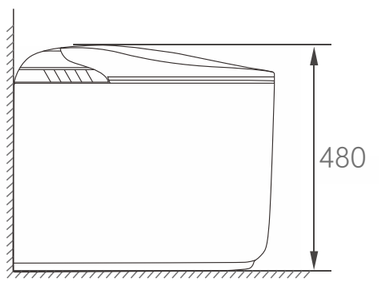

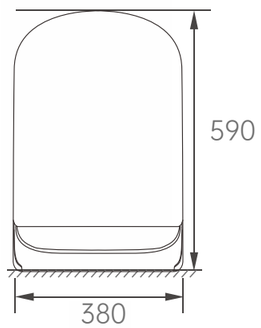

PRODUCT INFORMATION

Size: 590x380x480mm Pit distance: 300/400mm

Heating: instant heating Flushing: jet siphon type Drainage: floor drainage

Simplified version No water pressure requirement

No washing/No drying/No display screen/No remote control

Manual flip cover | Capacitor foot-operated flush | Sedentary Reminder | Year-round temperature control | Smart Size Adjustment

Simplified Automatic Version No water pressure requirement

No washing/No drying/No display screen

Doorbell Remote Control | Auto-flip cover | Foam Shield Deodorizer | Capacitor foot-operated flush | Sedentary Reminder | Year-round temperature control | Smart Size Adjustment

Standard version No water pressure requirement

Remote control operation | Manual flip cover | Foam Shield Deodorizer | Bidet | Warm air drying | High-definition display screen | Capacitor foot-operated flush

Sedentary Reminder | Year-round temperature control | Smart Size Adjustment

High configuration version No water pressure requirement

Remote control operation | Auto-flip cover | Capacitive foot feel flip cover/circle | Foam Shield Deodorizer | Bidet | Warm air drying | High-definition display screen

Smart Size Adjustment | Capacitor foot-operated flush | Year-round temperature control

Top-of-the-line version No water pressure requirement

Voice Control | Remote control operation | Auto-flip cover | Capacitive foot feel flip cover/circle | Foam Shield Deodorizer | Bidet | Warm air drying

High-definition display screen | Smart Size Adjustment | Capacitor foot-operated flush | Year-round temperature control

basic function

Super vortex flushing	Reciprocating cleaning	Strong and weak massage	Children's cleaning	Off seat flushing	Pipe position adjustment	Leakage protection	Warm air drying	Prevent low-temperature burns
Intelligent size punch	Power outage flushing	Water pressure regulation	Seat induction	Water temperature regulation	Remote control flushing	Wind and temperature regulation	Digital display	Seat heating
Four season warmth sensation	Hip cleaning	Female cleaning	Side button	Self cleaning nozzle	Slowly lowering the cover plate	Sedentary reminder	ABS antibacterial spray bar	Intelligent remote control

E81

Floor-mounted smart toilet

Scan the code to watch











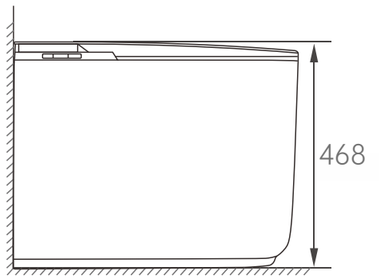

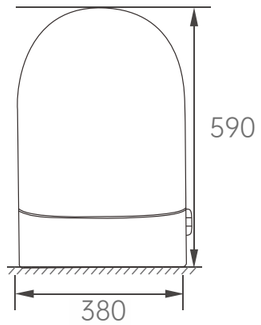

PRODUCT INFORMATION

Size: 590x380x468mm Pit distance: 300/400mm

Heating: instant heating Flushing: jet siphon type Drainage: floor drainage





Simplified version
No water pressure requirement

No washing/No drying/No display screen/No remote control

Manual flip cover | Capacitor foot-operated flush | Sedentary Reminder | Year-round temperature control | Smart Size Adjustment

Simplified Automatic Version
No water pressure requirement

No washing/No drying/No display screen

Doorbell Remote Control | Auto-flip cover | Foam Shield Deodorizer | Capacitor foot-operated flush | Sedentary Reminder | Year-round temperature control | Smart Size Adjustment

Standard version
No water pressure requirement

Remote control operation | Manual flip cover | Foam Shield Deodorizer | Bidet | Warm air drying | High-definition display screen | Capacitor foot-operated flush

Sedentary Reminder | Year-round temperature control | Smart Size Adjustment

High configuration version
No water pressure requirement

Remote control operation | Auto-flip cover | Capacitive foot feel flip cover/circle | Foam Shield Deodorizer | Bidet | Warm air drying | High-definition display screen

Smart Size Adjustment | Capacitor foot-operated flush | Year-round temperature control

Top-of-the-line version
No water pressure requirement

Voice Control | Remote control operation | Auto-flip cover | Capacitive foot feel flip cover/circle | Foam Shield Deodorizer | Bidet | Warm air drying

High-definition display screen | Smart Size Adjustment | Capacitor foot-operated flush | Year-round temperature control

basic function

Super vortex flushing	Reciprocating cleaning	Strong and weak massage	Children's cleaning	Off seat flushing	Pipe position adjustment	Leakage protection	Warm air drying	Prevent low-temperature burns
Intelligent size punch	Power outage flushing	Water pressure regulation	Seat induction	Water temperature regulation	Remote control flushing	Wind and temperature regulation	Digital display	Seat heating
Four season warmth sensation	Hip cleaning	Female cleaning	Side button	Self cleaning nozzle	Slowly lowering the cover plate	Sedentary reminder	ABS antibacterial spray bar	Intelligent remote control

E91

Floor-mounted smart toilet

Scan the code to watch















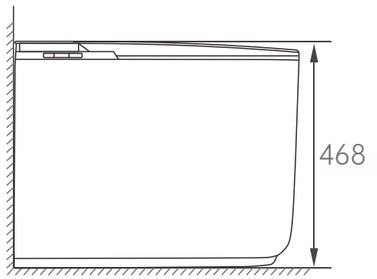

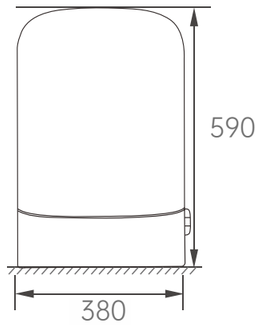

PRODUCT INFORMATION

Size: 590x380x468mm Pit distance: 300/400mm

Heating: instant heating Flushing: jet siphon type Drainage: floor drainage

Simplified version
No water pressure requirement

No washing/No drying/No display screen/No remote control

Manual flip cover | Capacitor foot-operated flush | Sedentary Reminder | Year-round temperature control | Smart Size Adjustment

Simplified Automatic Version
No water pressure requirement

No washing/No drying/No display screen

Doorbell Remote Control | Auto-flip cover | Foam Shield Deodorizer | Capacitor foot-operated flush | Sedentary Reminder | Year-round temperature control | Smart Size Adjustment

Standard version
No water pressure requirement

Remote control operation | Manual flip cover | Foam Shield Deodorizer | Bidet | Warm air drying | High-definition display screen | Capacitor foot-operated flush

Sedentary Reminder | Year-round temperature control | Smart Size Adjustment

High configuration version
No water pressure requirement

Remote control operation | Auto-flip cover | Capacitive foot feel flip cover/circle | Foam Shield Deodorizer | Bidet | Warm air drying | High-definition display screen

Smart Size Adjustment | Capacitor foot-operated flush | Year-round temperature control

Top-of-the-line version
No water pressure requirement

Voice Control | Remote control operation | Auto-flip cover | Capacitive foot feel flip cover/circle | Foam Shield Deodorizer | Bidet | Warm air drying

High-definition display screen | Smart Size Adjustment | Capacitor foot-operated flush | Year-round temperature control

basic function

Super vortex flushing	Reciprocating cleaning	Strong and weak massage	Children's cleaning	Off seat flushing	Pipe position adjustment	Leakage protection	Warm air drying	Prevent low-temperature burns
Intelligent size punch	Power outage flushing	Water pressure regulation	Seat induction	Water temperature regulation	Remote control flushing	Wind and temperature regulation	Digital display	Seat heating
Four season warmth sensation	Hip cleaning	Female cleaning	Side button	Self cleaning nozzle	Slowly lowering the cover plate	Sedentary reminder	ABS antibacterial spray bar	Intelligent remote control

Quiet and elegant
Quality bathroom

Adopting a silent design, the flushing and flip cover are silent, with an exquisite appearance Paired with elegant color schemes, create a quiet and beautiful bathroom space, allowing Relax both physically and mentally.



Side buttons, intuitive and easy to recognize

Integrated functionality, intuitive and convenient operation, making every use more effortless. Minimalist design and The combination of humanized operation.



No water pressure restriction

Built in large capacity water tank and booster pump, instant flushing with zero water pressure, integrated design saves space, and is suitable for use in high-rise and old residential areas. It is also not affected during peak water usage periods or power outages.

E75

Floor-mounted smart toilet















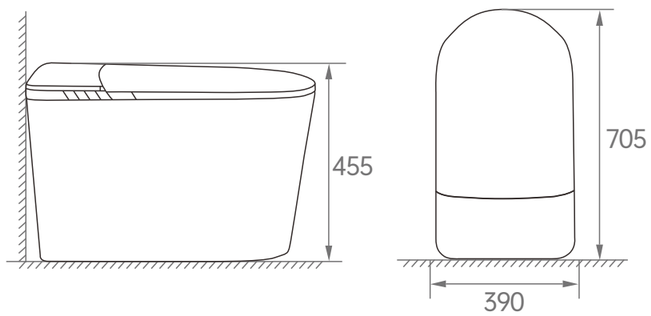

PRODUCT INFORMATION

Size: 705x390x455mm Pit distance: 300/400mm

Heating: instant heating Flushing: jet siphon type Drainage: floor drainage

Simplified version

No water pressure requirement

No washing/No drying/No display screen/No remote control

Manual flip cover | Capacitor foot-operated flush | Sedentary Reminder | Year-round temperature control | Smart Size Adjustment

Simplified Automatic Version

No water pressure requirement

No washing/No drying/No display screen

Doorbell Remote Control | Auto-flip cover | Foam Shield Deodorizer | Capacitor foot-operated flush | Sedentary Reminder | Year-round temperature control | Smart Size Adjustment

Standard version

No water pressure requirement

Remote control operation | Manual flip cover | Foam Shield Deodorizer | Bidet | Warm air drying | High-definition display screen | Capacitor foot-operated flush

Sedentary Reminder | Year-round temperature control | Smart Size Adjustment

High configuration version

No water pressure requirement

Remote control operation | Auto-flip cover | Capacitive foot feel flip cover/circle | Foam Shield Deodorizer | Bidet | Warm air drying | High-definition display screen

Smart Size Adjustment | Capacitor foot-operated flush | Year-round temperature control

Top-of-the-line version

No water pressure requirement

Voice Control | Remote control operation | Auto-flip cover | Capacitive foot feel flip cover/circle | Foam Shield Deodorizer | Bidet | Warm air drying

High-definition display screen | Smart Size Adjustment | Capacitor foot-operated flush | Year-round temperature control

basic function

Super vortex flushing	Reciprocating cleaning	Strong and weak massage	Children's cleaning	Off seat flushing	Pipe position adjustment	Leakage protection	Warm air drying	Prevent low-temperature burns
Intelligent size punch	Power outage flushing	Water pressure regulation	Seat induction	Water temperature regulation	Remote control flushing	Wind and temperature regulation	Digital display	Seat heating
Four season warmth sensation	Hip cleaning	Female cleaning	Side button	Self cleaning nozzle	Slowly lowering the cover plate	Sedentary reminder	ABS antibacterial spray bar	Intelligent remote control

E76

Floor-mounted smart toilet















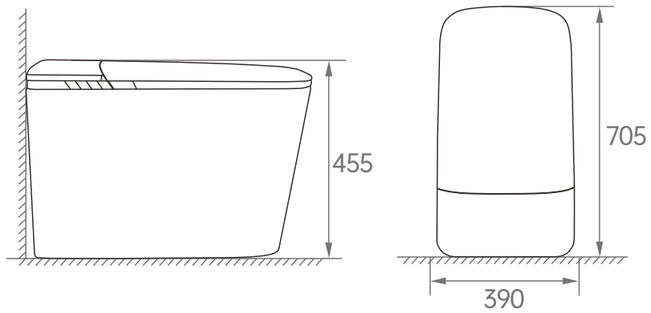

PRODUCT INFORMATION

Size: 705x390x455mm Pit distance: 300/400mm

Heating: instant heating Flushing: jet siphon type Drainage: floor drainage

Simplified version No water pressure requirement

No washing/No drying/No display screen

Manual flip cover | Capacitor foot-operated flush | Sedentary Reminder | Year-round temperature control | Smart Size Adjustment

Simplified Automatic Version No water pressure requirement

No washing/No drying/No display screen

Doorbell Remote Control | Auto-flip cover | Foam Shield Deodorizer | Capacitor foot-operated flush | Sedentary Reminder | Year-round temperature control | Smart Size Adjustment

Standard version No water pressure requirement

Remote control operation | Manual flip cover | Foam Shield Deodorizer | Bidet | Warm air drying | High-definition display screen | Capacitor foot-operated flush

Sedentary Reminder | Year-round temperature control | Smart Size Adjustment

High configuration version No water pressure requirement

Remote control operation | Auto-flip cover | Capacitive foot feel flip cover/circle | Foam Shield Deodorizer | Bidet | Warm air drying | High-definition display screen

Smart Size Adjustment | Capacitor foot-operated flush | Year-round temperature control

Top-of-the-line version No water pressure requirement

Voice Control | Remote control operation | Auto-flip cover | Capacitive foot feel flip cover/circle | Foam Shield Deodorizer | Bidet | Warm air drying

High-definition display screen | Smart Size Adjustment | Capacitor foot-operated flush | Year-round temperature control

basic function

Super vortex flushing	Reciprocating cleaning	Strong and weak massage	Children's cleaning	Off seat flushing	Pipe position adjustment	Leakage protection	Warm air drying	Prevent low-temperature burns
Intelligent size punch	Power outage flushing	Water pressure regulation	Seat induction	Water temperature regulation	Remote control flushing	Wind and temperature regulation	Digital display	Seat heating
Four season warmth sensation	Hip cleaning	Female cleaning	Side button	Self cleaning nozzle	Slowly lowering the cover plate	Sedentary reminder	ABS antibacterial spray bar	Intelligent remote control

E40

Floor-mounted smart toilet

Scan the code to watch









Jet Black



Premium Gray



Platinum Dust Silver



Wood grain

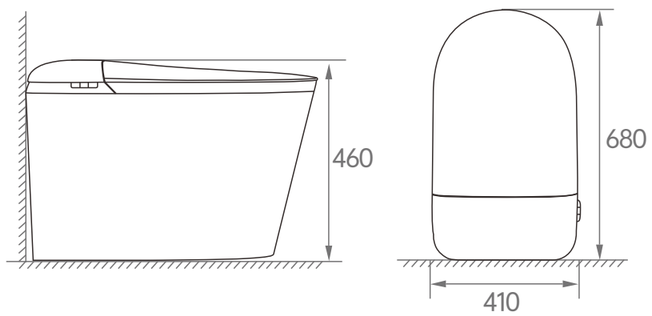

PRODUCT INFORMATION

Size: 680x410x460mm Pit distance: 300/400mm

Heating: instant heating Flushing: jet siphon type Drainage: floor drainage

Simplified version
No water pressure requirement

No washing/No drying/No display screen/No remote control

Manual flip cover | Capacitor foot-operated flush | Sedentary Reminder | Year-round temperature control | Smart Size Adjustment

Simplified Automatic Version
No water pressure requirement

No washing/No drying/No display screen

Doorbell Remote Control | Auto-flip cover | Foam Shield Deodorizer | Capacitor foot-operated flush | Sedentary Reminder | Year-round temperature control | Smart Size Adjustment

Standard version
No water pressure requirement

Remote control operation | Manual flip cover | Foam Shield Deodorizer | Bidet | Warm air drying | High-definition display screen | Capacitor foot-operated flush

Sedentary Reminder | Year-round temperature control | Smart Size Adjustment

High configuration version
No water pressure requirement

Remote control operation | Auto-flip cover | Capacitive foot feel flip cover/circle | Foam Shield Deodorizer | Bidet | Warm air drying | High-definition display screen

Smart Size Adjustment | Capacitor foot-operated flush | Year-round temperature control

Top-of-the-line version
No water pressure requirement

Voice Control | Remote control operation | Auto-flip cover | Capacitive foot feel flip cover/circle | Foam Shield Deodorizer | Bidet | Warm air drying

High-definition display screen | Smart Size Adjustment | Capacitor foot-operated flush | Year-round temperature control

basic function

Super vortex flushing	Reciprocating cleaning	Strong and weak massage	Children's cleaning	Off seat flushing	Pipe position adjustment	Leakage protection	Warm air drying	Prevent low-temperature burns
Intelligent size punch	Power outage flushing	Water pressure regulation	Seat induction	Water temperature regulation	Remote control flushing	Wind and temperature regulation	Digital display	Seat heating
Four season warmth sensation	Hip cleaning	Female cleaning	Side button	Self cleaning nozzle	Slowly lowering the cover plate	Sedentary reminder	ABS antibacterial spray bar	Intelligent remote control

E41

Floor-mounted smart toilet

Scan the code to watch









Jet Black



Premium Gray



Platinum Dust Silver



Wood grain

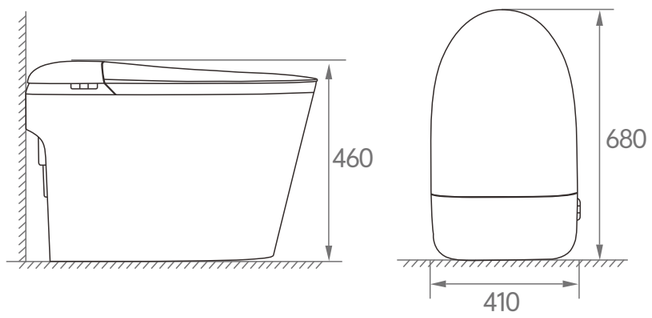

PRODUCT INFORMATION

Size: 680x410x460mm Pit distance: 300/400mm

Heating: instant heating Flushing: jet siphon type Drainage: floor drainage

Simplified version
No water pressure requirement

No washing/No drying/No display screen/No remote control

Manual flip cover | Capacitor foot-operated flush | Sedentary Reminder | Year-round temperature control | Smart Size Adjustment

Simplified Automatic Version
No water pressure requirement

No washing/No drying/No display screen

Doorbell Remote Control | Auto-flip cover | Foam Shield Deodorizer | Capacitor foot-operated flush | Sedentary Reminder | Year-round temperature control | Smart Size Adjustment

Standard version
No water pressure requirement

Remote control operation | Manual flip cover | Foam Shield Deodorizer | Bidet | Warm air drying | High-definition display screen | Capacitor foot-operated flush

Sedentary Reminder | Year-round temperature control | Smart Size Adjustment

High configuration version
No water pressure requirement

Remote control operation | Auto-flip cover | Capacitive foot feel flip cover/circle | Foam Shield Deodorizer | Bidet | Warm air drying | High-definition display screen

Smart Size Adjustment | Capacitor foot-operated flush | Year-round temperature control

Top-of-the-line version
No water pressure requirement

Voice Control | Remote control operation | Auto-flip cover | Capacitive foot feel flip cover/circle | Foam Shield Deodorizer | Bidet | Warm air drying

High-definition display screen | Smart Size Adjustment | Capacitor foot-operated flush | Year-round temperature control

basic function

Super vortex flushing	Reciprocating cleaning	Strong and weak massage	Children's cleaning	Off seat flushing	Pipe position adjustment	Leakage protection	Warm air drying	Prevent low-temperature burns
Intelligent size punch	Power outage flushing	Water pressure regulation	Seat induction	Water temperature regulation	Remote control flushing	Wind and temperature regulation	Digital display	Seat heating
Four season warmth sensation	Hip cleaning	Female cleaning	Side button	Self cleaning nozzle	Slowly lowering the cover plate	Sedentary reminder	ABS antibacterial spray bar	Intelligent remote control

E45

Floor-mounted smart toilet

Scan the code to watch









Jet Black



Premium Gray



Platinum Dust Silver



Wood grain

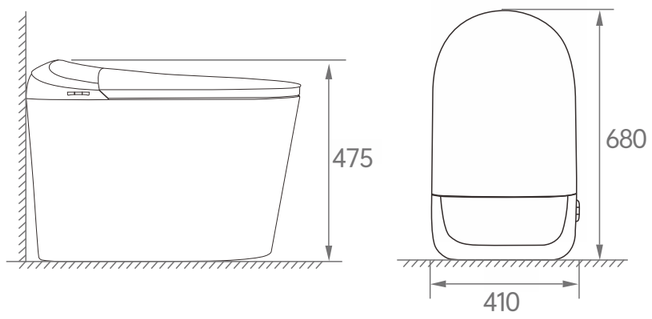

PRODUCT INFORMATION

Size: 680x410x475mm Pit distance: 300/400mm

Heating: instant heating Flushing: jet siphon type Drainage: floor drainage

Simplified version
No water pressure requirement

No washing/No drying/No display screen/No remote control

Manual flip cover | Capacitor foot-operated flush | Sedentary Reminder | Year-round temperature control | Smart Size Adjustment

Simplified Automatic Version
No water pressure requirement

No washing/No drying/No display screen

Doorbell Remote Control | Auto-flip cover | Foam Shield Deodorizer | Capacitor foot-operated flush | Sedentary Reminder | Year-round temperature control | Smart Size Adjustment

Standard version
No water pressure requirement

Remote control operation | Manual flip cover | Foam Shield Deodorizer | Bidet | Warm air drying | High-definition display screen | Capacitor foot-operated flush

Sedentary Reminder | Year-round temperature control | Smart Size Adjustment

High configuration version
No water pressure requirement

Remote control operation | Auto-flip cover | Capacitive foot feel flip cover/circle | Foam Shield Deodorizer | Bidet | Warm air drying | High-definition display screen

Smart Size Adjustment | Capacitor foot-operated flush | Year-round temperature control

Top-of-the-line version
No water pressure requirement

Voice Control | Remote control operation | Auto-flip cover | Capacitive foot feel flip cover/circle | Foam Shield Deodorizer | Bidet | Warm air drying

High-definition display screen | Smart Size Adjustment | Capacitor foot-operated flush | Year-round temperature control

basic function

Super vortex flushing	Reciprocating cleaning	Strong and weak massage	Children's cleaning	Off seat flushing	Pipe position adjustment	Leakage protection	Warm air drying	Prevent low-temperature burns
Intelligent size punch	Power outage flushing	Water pressure regulation	Seat induction	Water temperature regulation	Remote control flushing	Wind and temperature regulation	Digital display	Seat heating
Four season warmth sensation	Hip cleaning	Female cleaning	Side button	Self cleaning nozzle	Slowly lowering the cover plate	Sedentary reminder	ABS antibacterial spray bar	Intelligent remote control

E46

Floor-mounted smart toilet

Scan the code to watch









Jet Black



Premium Gray



Platinum Dust Silver



Wood grain

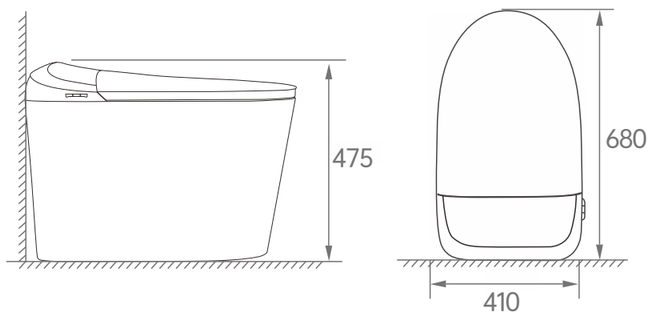

PRODUCT INFORMATION

Size: 680x410x475mm Pit distance: 300/400mm

Heating: instant heating Flushing: jet siphon type Drainage: floor drainage

Simplified version
No water pressure requirement

No washing/No drying/No display screen/No remote control

Manual flip cover | Capacitor foot-operated flush | Sedentary Reminder | Year-round temperature control | Smart Size Adjustment

Simplified Automatic Version
No water pressure requirement

No washing/No drying/No display screen

Doorbell Remote Control | Auto-flip cover | Foam Shield Deodorizer | Capacitor foot-operated flush | Sedentary Reminder | Year-round temperature control | Smart Size Adjustment

Standard version
No water pressure requirement

Remote control operation | Manual flip cover | Foam Shield Deodorizer | Bidet | Warm air drying | High-definition display screen | Capacitor foot-operated flush

Sedentary Reminder | Year-round temperature control | Smart Size Adjustment

High configuration version
No water pressure requirement

Remote control operation | Auto-flip cover | Capacitive foot feel flip cover/circle | Foam Shield Deodorizer | Bidet | Warm air drying | High-definition display screen

Smart Size Adjustment | Capacitor foot-operated flush | Year-round temperature control

Top-of-the-line version
No water pressure requirement

Voice Control | Remote control operation | Auto-flip cover | Capacitive foot feel flip cover/circle | Foam Shield Deodorizer | Bidet | Warm air drying

High-definition display screen | Smart Size Adjustment | Capacitor foot-operated flush | Year-round temperature control

basic function

Super vortex flushing	Reciprocating cleaning	Strong and weak massage	Children's cleaning	Off seat flushing	Pipe position adjustment	Leakage protection	Warm air drying	Prevent low-temperature burns
Intelligent size punch	Power outage flushing	Water pressure regulation	Seat induction	Water temperature regulation	Remote control flushing	Wind and temperature regulation	Digital display	Seat heating
Four season warmth sensation	Hip cleaning	Female cleaning	Side button	Self cleaning nozzle	Slowly lowering the cover plate	Sedentary reminder	ABS antibacterial spray bar	Intelligent remote control

E5

Floor-mounted smart toilet

Scan the code to watch















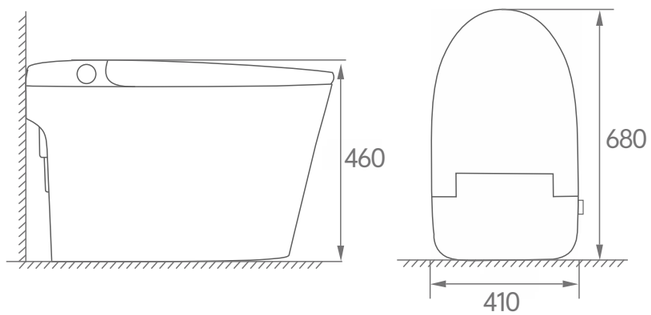

PRODUCT INFORMATION

Size: 680x410x460mm Pit distance: 300/400mm

Heating: instant heating Flushing: jet siphon type Drainage: floor drainage

Simplified version Optional: Pulse/Water Tank

No washing/No drying/No display screen/No remote control

Manual flip cover | foot-operated flushing | Sedentary Reminder | Year-round temperature control | Smart Size Adjustment

Simplified Automatic Version Optional: Pulse/Water Tank

No washing/No drying/No display screen

Doorbell Remote Control | Auto-flip cover | Foam Shield Deodorizer | foot-operated flushing | Sedentary Reminder | Year-round temperature control | Smart Size Adjustment

basic function

Super vortex flushing | Off seat flushing | Leakage protection | Prevent low-temperature burns | Intelligent size punch | Power outage flushing | Seat induction | Seat heating | Four season warmth sensation

Side button | Slowly lowering the cover plate

Non electric series W0

No electricity design
Core technology

Utilizing the energy of air does not require electricity, and there is no need to reserve power sockets,
It can achieve the flushing of a flat and water tank free toilet, fully realizing the function
The convenience and environmental protection concept of smart living have emerged.



Kirin air can be pressurized, not afraid of low water pressure erosion

Pure mechanical structure, longer lifespan, 3 times cleaner than the national standard, further propelled by air to push the boxThe internal water flow engulfs the dirt in the toilet, leaving no residue when flushed to the bottom.



Healthy cold water cleaning, caring for every inch of the skin

The spray bar design elevates the daily cleaning experience to a whole new level. Every drop of water is as gentle, delicate, healthy, and comfortable as a SPA, providing a comfortable washing experience.

W01

Floor standing non electric toilet

Scan the code to watch















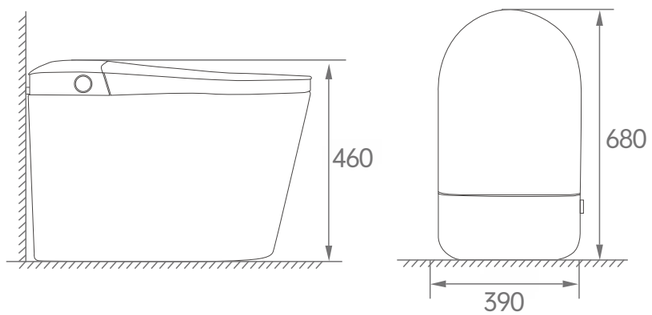

PRODUCT INFORMATION

Size: 680x390x460mm Pit distance: 300/400mm

Heating: instant heating Flushing: jet siphon type Drainage: floor drainage

No Electricity No Cleaning Version

Manual flip cover | Foot-operated flush | No water pressure restrictions

Non-powered belt cleaning version

Manual flip cover | Foot-operated flush | No water pressure restrictions | One-touch knob | Butt Wash | Gentle Feminine Wash

basic function

Super Vortex Flush Buttock Wash Feminine Wash Side Knob Kick Flush Soft-Close Lid

W02

Floor standing non electric toilet

Scan the code to watch















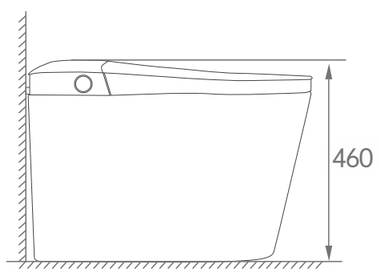

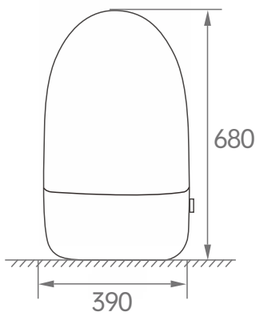

PRODUCT INFORMATION

Size: 680x390x460mm Pit distance: 300/400mm

Heating: instant heating Flushing: jet siphon type Drainage: floor drainage

No Electricity No Cleaning Version

Manual flip cover | Foot-operated flush | No water pressure restrictions

Non-powered belt cleaning version

Manual flip cover | Foot-operated flush | No water pressure restrictions | One-touch knob | Butt Wash | Gentle Feminine Wash

basic function

Super Vortex Flush Buttock Wash Feminine Wash Side Knob Kick Flush Soft-Close Lid

Product Specification and Configuration Table

Function Configuration	Function Configuration	Basic version O	Basic version OZP	Standard Edition D	Premium version E	Top configuration F
Basic functions	Seat heating	●	●	●	●	●
	Damping gradual decrease	●	●	●	●	●
	Soft lighting	●	●	●	●	●
	Flush after use	●	●	●	●	●
	No electric flushing	●	●	●	●	●
	Side button	●	●	●	●	●
	Hip wash	×	×	●	●	●
	Woman washing	×	×	●	●	●
	Dry	×	×	●	●	●
	Instant heating	×	×	●	●	●
	Spray nozzle self-cleaning	×	×	●	●	●
	Detachable nozzle	×	×	●	●	●
	Earth leakage protection	●	●	●	●	●
Accessibility	Seat temperature regulation	●	●	●	●	●
	Seat ring antibacterial	●	●	●	●	●
	Energy saving	●	●	●	●	●
	Water temperature adjustment	×	×	●	●	●
	Wind and temperature regulation	×	×	●	●	●
	Water pressure regulation	×	×	●	●	●
	Shift cleaning	×	×	●	●	●
Extended features	Capacitive foot feel flushing	●	●	●	●	●
	Size clash	●	●	●	●	●
	No water pressure restriction	●	●	●	●	●
	Built in foam shield	×	●	●	●	●
	Radar induction flip cover	×	●	×	●	●
	Capacitive foot sensor flip cover	×	●	×	●	●
	Remote control	×	●	●	●	●
	Digital Display Screen	×	×	●	●	●
	intelligent voice	×	×	×	×	●