DOSI PROJECT

Váter inteligente K45

K45 okos WC

Fotografías, plano dimensional y tabla de funciones por versión.

Las versiones simplificadas, estándar y superiores tienen equipamientos distintos. No atribuir a todas las versiones las mismas funciones.

Documentación técnica del proveedor. Las medidas, prestaciones, configuración, instalación, garantía y asistencia se confirman para el modelo y proyecto concretos.

Beszállítói műszaki dokumentáció. A méreteket, a felszereltséget, a telepítést, a jótállást és a támogatás feltételeit projektenként egyeztetjük.

dosiproject.com
dosiprojectweb@gmail.com
WhatsApp +34 620 867 616

K45

Floor-mounted smart toilet

Scan the code to watch









Jet Black



Premium Gray



Platinum Dust Silver



Wood grain

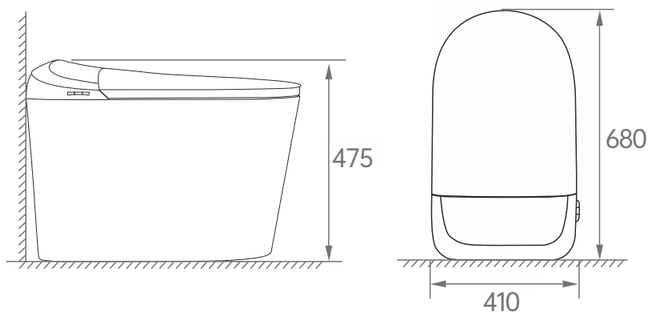

PRODUCT INFORMATION

Size: 680x410x475mm Pit distance: 300/400mm

Heating: instant heating Flushing: jet siphon type Drainage: floor drainage

Simplified version
No water pressure requirement

No washing/No drying/No display screen/No remote control

Manual flip cover | Capacitor foot-operated flush | Sedentary Reminder | Year-round temperature control | Smart Size Adjustment

Simplified Automatic Version
No water pressure requirement

No washing/No drying/No display screen

Doorbell Remote Control | Auto-flip cover | Foam Shield Deodorizer | Capacitor foot-operated flush | Sedentary Reminder | Year-round temperature control | Smart Size Adjustment

Standard version
No water pressure requirement

Remote control operation | Manual flip cover | Foam Shield Deodorizer | Bidet | Warm air drying | High-definition display screen | Capacitor foot-operated flush

Sedentary Reminder | Year-round temperature control | Smart Size Adjustment

High configuration version
No water pressure requirement

Remote control operation | Auto-flip cover | Capacitive foot feel flip cover/circle | Foam Shield Deodorizer | Bidet | Warm air drying | High-definition display screen

Smart Size Adjustment | Capacitor foot-operated flush | Year-round temperature control

Top-of-the-line version
No water pressure requirement

Voice Control | Remote control operation | Auto-flip cover | Capacitive foot feel flip cover/circle | Foam Shield Deodorizer | Bidet | Warm air drying

High-definition display screen | Smart Size Adjustment | Capacitor foot-operated flush | Year-round temperature control

basic function

Super vortex flushing	Reciprocating cleaning	Strong and weak massage	Children's cleaning	Off seat flushing	Pipe position adjustment	Leakage protection	Warm air drying	Prevent low-temperature burns
Intelligent size punch	Power outage flushing	Water pressure regulation	Seat induction	Water temperature regulation	Remote control flushing	Wind and temperature regulation	Digital display	Seat heating
Four season warmth sensation	Hip cleaning	Female cleaning	Side button	Self cleaning nozzle	Slowly lowering the cover plate	Sedentary reminder	ABS antibacterial spray bar	Intelligent remote control